LM95221 Dual Remote Diode Digital Temperature Sensor with SMBus Interface

Check for Samples: LM95221

FEATURES

- **Accurately Senses Die Temperature of Remote ICs or Diode Junctions**
- **Remote Diode Fault Detection**
- **On-board Local Temperature Sensing**
- **Remote Temperature Readings**
  - **0.125°C LSb**
  - **10-bits Plus Sign or 11-bits Programmable Resolution**
  - **11-bits Resolves Temperatures Above 127°C**
- **Local Temperature Readings**
  - **0.25°C**
  - **9-bits Plus Sign**
- **Status Register Support**
- **Programmable Conversion Rate Allows User Optimization of Power Consumption**
- **Shutdown Mode One-shot Conversion Control**
- **SMBus 2.0 Compatible Interface, Supports TIMEOUT**
- **8-pin VSSOP Package**

KEY SPECIFICATIONS

- **Local Temperature Accuracy**
  - **T_A = 0°C to 85°C ± 3.0°C (max)**
- **Remote Diode Temperature Accuracy**
  - **T_A = 30°C to 50°C, TD = 45°C to 85°C ±1.0 °C (Max)**
  - **T_A = 0°C to 85°C, TD = 25°C to 140°C ±3.0°C (Max)**
- **Supply Voltage 3.0 V to 3.6 V**
- **Supply Current 2 mA (Typ)**

APPLICATIONS

- **Processor/Computer System Thermal Management (e.g. Laptop, Desktop, Workstations, Server)**
- **Electronic Test Equipment**
- **Office Electronics**

DESCRIPTION

The LM95221 is a dual remote diode temperature sensor in an 8-lead VSSOP package. The 2-wire serial interface of the LM95221 is compatible with SMBus 2.0. The LM95221 can sense three temperature zones, it can measure the temperature of its own die as well as two diode connected transistors. The diode connected transistors can be a thermal diode as found in Pentium and AMD processors or can simply be a diode connected MMBT3904 transistor. The LM95221 resolution format for remote temperature readings can be programmed to be 10-bits plus sign or 11-bits unsigned. In the unsigned mode the LM95221 remote diode readings can resolve temperatures above 127°C. Local temperature readings have a resolution of 9-bits plus sign.

The temperature of any ASIC can be accurately determined using the LM95221 as long as a dedicated diode (semiconductor junction) is available on the target die. The LM95221 remote sensor accuracy of ±1°C is factory trimmed for a series resistance of 2.7 ohms and 1.008 non-ideality factor.

Please be aware that an important notice concerning availability, standard warranty, and use in critical applications of Texas Instruments semiconductor products and disclaimers thereto appears at the end of this data sheet.

All trademarks are the property of their respective owners.

PRODUCTION DATA information is current as of publication date. Products conform to specifications per the terms of the Texas Instruments standard warranty. Production processing does not necessarily include testing of all parameters.

Copyright © 2004–2013, Texas Instruments Incorporated

Simplified Block Diagram

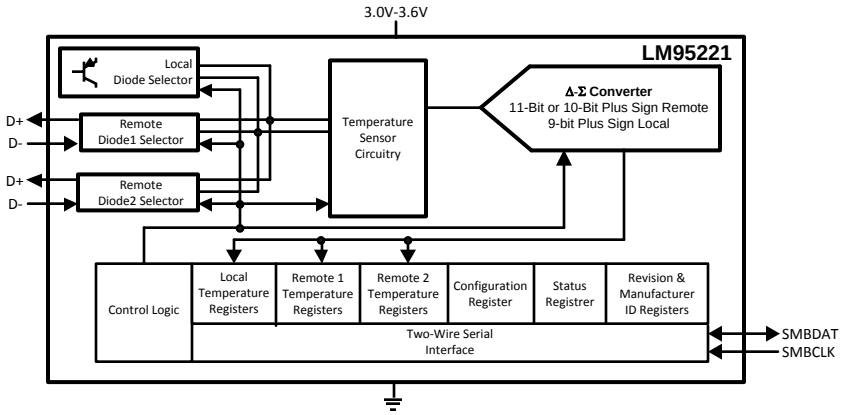

Connection Diagram

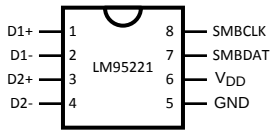

Figure 1. VSSOP-8
TOP VIEW

PIN DESCRIPTIONS

Label	Pin #	Function	Typical Connection
D1+	1	Diode Current Source	To Diode Anode. Connected to remote discrete diode-connected transistor junction or to the diode-connected transistor junction on a remote IC whose die temperature is being sensed. A 2.2 nF diode bypass capacitor is recommended to filter high frequency noise. Place the 2.2 nF capacitor between and as close as possible to the LM95221's D+ and D− pins. Make sure the traces to the 2.2 nF capacitor are matched. Ground this pin if this thermal diode is not used.
D1−	2	Diode Return Current Sink	To Diode Cathode. A 2.2 nF capacitor is recommended between D1+ and D1-. Ground this pin if this thermal diode is not used.
D2+	3	Diode Current Source	To Diode Anode. Connected to remote discrete diode-connected transistor junction or to the diode-connected transistor junction on a remote IC whose die temperature is being sensed. A 2.2 nF diode bypass capacitor is recommended to filter high frequency noise. Place the 2.2 nF capacitor between and as close as possible to the LM95221's D+ and D− pins. Make sure the traces to the 2.2 nF capacitor are matched. Ground this pin if this thermal diode is not used.
D2−	4	Diode Return Current Sink	To Diode Cathode. A 2.2 nF capacitor is recommended between D2+ and D2-. Ground this pin if this thermal diode is not used.
GND	5	Power Supply Ground	Ground
V_{DD}	6	Positive Supply Voltage Input	DC Voltage from 3.0 V to 3.6 V. V_{DD} should be bypassed with a 0.1 µF capacitor in parallel with 100 pF. The 100 pF capacitor should be placed as close as possible to the power supply pin. Noise should be kept below 200 mVp-p, a 10 µF capacitor may be required to achieve this.
SMBDAT	7	SMBus Bi-Directional Data Line, Open-Drain Output	From and to Controller; may require an external pull-up resistor
SMBCLK	8	SMBus Clock Input	From Controller; may require an external pull-up resistor

Copyright © 2004–2013, Texas Instruments Incorporated

Typical Application

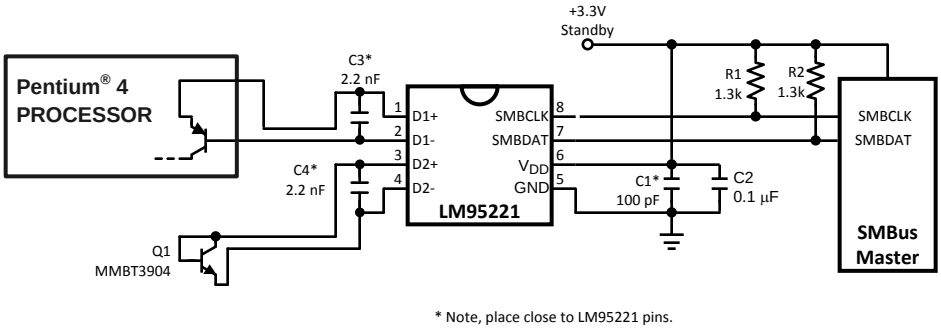

These devices have limited built-in ESD protection. The leads should be shorted together or the device placed in conductive foam during storage or handling to prevent electrostatic damage to the MOS gates.

Absolute Maximum Ratings[1]

Supply Voltage			−0.3 V to 6.0 V
Voltage at SMBDAT, SMBCLK			−0.5V to 6.0V
Voltage at Other Pins			−0.3 V to (V_{DD} + 0.3 V)
D− Input Current			±1 mA
Input Current at All Other Pins[2]			±5 mA
Package Input Current[2]			30 mA
SMBDAT Output Sink Current			10 mA
Storage Temperature			−65°C to +150°C
Soldering Information, Lead Temperature	VSSOP-8 Package[3]	Vapor Phase (60 seconds)	215°C
		Infrared (15 seconds)	220°C
ESD Susceptibility[4]	Human Body Model		2000 V
	Machine Model		200 V

(1) Absolute Maximum Ratings indicate limits beyond which damage to the device may occur. DC and AC electrical specifications do not apply when operating the device beyond its rated operating conditions.
(2) When the input voltage (V_I) at any pin exceeds the power supplies (V_I < GND or V_I > V_{DD}), the current at that pin should be limited to 5 mA. Parasitic components and or ESD protection circuitry are shown in Figure 3 below for the LM95221's pins. The nominal breakdown voltage of D4 is 6.5 V. Care should be taken not to forward bias the parasitic diode, D1, present on pins: D1+, D2+, D1−, D2−. Doing so by more than 50 mV may corrupt the temperature measurements.
(3) See the URL "http://www.ti.com/packaging/" for other recommendations and methods of soldering surface mount devices.
(4) Human body model, 100pF discharged through a 1.5kΩ resistor. Machine model, 200pF discharged directly into each pin.

Operating Ratings[1][2]

Operating Temperature Range	0°C to +115°C
Electrical Characteristics Temperature Range	$T_{MIN} \le T_A \le T_{MAX}$
LM95221CIMM	$0°C \le T_A \le +85°C$
Supply Voltage Range (V_{DD})	+3.0V to +3.6V

(1) Absolute Maximum Ratings indicate limits beyond which damage to the device may occur. DC and AC electrical specifications do not apply when operating the device beyond its rated operating conditions.
(2) Thermal resistance junction-to-ambient when attached to a printed circuit board with 2 oz. foil:
— VSSOP-8 = 210°C/W

Copyright © 2004–2013, Texas Instruments Incorporated

Temperature-to-Digital Converter Characteristic

Unless otherwise noted, these specifications apply for V_{DD}=+3.0Vdc to 3.6Vdc. **Boldface limits apply for $T_A = T_J = T_{MIN} \leq T_A \leq T_{MAX}$;** all other limits $T_A = T_J$=+25°C, unless otherwise noted. T_J is the junction temperature of the LM95221. T_D is the junction temperature of the remote thermal diode.

Parameter	Conditions		Typical (1)	Limits (2)	Units (Limit)
Accuracy Using Local Diode	T_A = 0°C to +85°C (3)		±1	**±3**	°C (max)
Accuracy Using Remote Diode, see (4) for Thermal Diode Processor Type.	T_A = +30°C to +50°C	T_D = +45°C to +85°C		**±1**	°C (max)
	T_A = +0°C to +85°C	T_D = +25°C to +140°C		**±3**	°C (max)
Remote Diode Measurement Resolution			11		Bits
			0.125		°C
Local Diode Measurement Resolution			10		Bits
			0.25		°C
Conversion Time of All Temperatures at the Fastest Setting	See (5)		66	**73**	ms (max)
Quiescent Current (6)	SMBus Inactive, 15Hz conversion rate		2.0	**2.6**	mA (max)
	Shutdown		335		µA
D− Source Voltage			0.7		V
Diode Source Current	(D+ − D−)=+ 0.65V; high-level		188	**315**	µA (max)
				110	µA (min)
	Low-level		11.75	**20**	µA (max)
				7	µA (min)
Low-Level Diode Source Current Variation over Temperature	T_A = +30°C to +50°C		+0.5		µA
	T_A = +30°C to +85°C		+1.5		µA
Power-On Reset Threshold	Measure on V_{DD} input, falling edge			**2.4** **1.8**	V (max) V (min)

(1) Typicals are at T_A = 25°C and represent most likely parametric normal.
(2) Limits are specified to Texas Instruments' AOQL (Average Outgoing Quality Level).
(3) Local temperature accuracy does not include the effects of self-heating. The rise in temperature due to self-heating is the product of the internal power dissipation of the LM95221 and the thermal resistance. See Note 2 of the Operating Ratings table for the thermal resistance to be used in the self-heating calculation.
(4) The accuracy of the LM95221CIMM is ensured when using the thermal diode with a non-ideality of 1.008 and series R= 2.7Ω. When using an MMBT3904 type transistor as the thermal diode the error band will be offset by -3.25°C
(5) This specification is provided only to indicate how often temperature data is updated. The LM95221 can be read at any time without regard to conversion state (and will yield last conversion result).
(6) Quiescent current will not increase substantially with an SMBus.

Copyright © 2004–2013, Texas Instruments Incorporated

Logic Electrical Characteristics

DIGITAL DC CHARACTERISTICS

Unless otherwise noted, these specifications apply for V_{DD}=+3.0 to 3.6 Vdc. **Boldface limits apply for $T_A = T_J = T_{MIN}$ to T_{MAX};** all other limits $T_A = T_J$=+25°C, unless otherwise noted.

Symbol	Parameter	Conditions	Typical (1)	Limits (2)	Units (Limit)
SMBDAT, SMBCLK INPUTS					
$V_{IN(1)}$	Logical "1" Input Voltage			**2.1**	V (min)
$V_{IN(0)}$	Logical "0"Input Voltage			**0.8**	V (max)
$V_{IN(HYST)}$	SMBDAT and SMBCLK Digital Input Hysteresis		400		mV
$I_{IN(1)}$	Logical "1" Input Current	$V_{IN} = V_{DD}$	0.005	**±10**	µA (max)
$I_{IN(0)}$	Logical "0" Input Current	V_{IN} = 0 V	−0.005	**±10**	µA (max)
C_{IN}	Input Capacitance		5		pF
SMBDAT OUTPUT					
I_{OH}	High Level Output Current	$V_{OH} = V_{DD}$		**10**	µA (max)
V_{OL}	SMBus Low Level Output Voltage	I_{OL} = 4mA I_{OL} = 6mA		**0.4** **0.6**	V (max)

(1) Typicals are at T_A = 25°C and represent most likely parametric normal.
(2) Limits are specified to Texas Instruments' AOQL (Average Outgoing Quality Level).

SMBus DIGITAL SWITCHING CHARACTERISTICS

Unless otherwise noted, these specifications apply for V_{DD}=+3.0 Vdc to +3.6 Vdc, C_L (load capacitance) on output lines = 80 pF. **Boldface limits apply for $T_A = T_J = T_{MIN}$ to T_{MAX};** all other limits $T_A = T_J$ = +25°C, unless otherwise noted.

The switching characteristics of the LM95221 fully meet or exceed the published specifications of the SMBus version 2.0. The following parameters are the timing relationships between SMBCLK and SMBDAT signals related to the LM95221. They adhere to but are not necessarily the SMBus bus specifications.

Symbol	Parameter	Conditions	Typical (1)	Limits (2)	Units (Limit)
f_{SMB}	SMBus Clock Frequency			**100** **10**	kHz (max) kHz (min)
t_{LOW}	SMBus Clock Low Time	from $V_{IN(0)}$max to $V_{IN(0)}$max		**4.7** **25**	µs (min) ms (max)
t_{HIGH}	SMBus Clock High Time	from $V_{IN(1)}$min to $V_{IN(1)}$min		**4.0**	µs (min)
$t_{R,SMB}$	SMBus Rise Time	See (3)	1		µs (max)
$t_{F,SMB}$	SMBus Fall Time	See (4)	0.3		µs (max)
t_{OF}	Output Fall Time	C_L = 400pF, I_O = 3mA (4)		**250**	ns (max)
$t_{TIMEOUT}$	SMBDAT and SMBCLK Time Low for Reset of Serial Interface (5)			**25** **35**	ms (min) ms (max)
$t_{SU;DAT}$	Data In Setup Time to SMBCLK High			**250**	ns (min)
$t_{HD;DAT}$	Data Out Stable after SMBCLK Low			**300** **900**	ns (min) ns (max)
$t_{HD;STA}$	Start Condition SMBDAT Low to SMBCLK Low (Start condition hold before the first clock falling edge)			**100**	ns (min)
$t_{SU;STO}$	Stop Condition SMBCLK High to SMBDAT Low (Stop Condition Setup)			**100**	ns (min)
$t_{SU;STA}$	SMBus Repeated Start-Condition Setup Time, SMBCLK High to SMBDAT Low			**0.6**	µs (min)

(1) Typicals are at T_A = 25°C and represent most likely parametric normal.
(2) Limits are specified to Texas Instruments' AOQL (Average Outgoing Quality Level).
(3) The output rise time is measured from ($V_{IN(0)}$max + 0.15V) to ($V_{IN(1)}$min − 0.15V).
(4) The output fall time is measured from ($V_{IN(1)}$min - 0.15V) to ($V_{IN(1)}$min + 0.15V).
(5) Holding the SMBDAT and/or SMBCLK lines Low for a time interval greater than $t_{TIMEOUT}$ will reset the LM95221's SMBus state machine, therefore setting SMBDAT and SMBCLK pins to a high impedance state.

Copyright © 2004–2013, Texas Instruments Incorporated

SMBus DIGITAL SWITCHING CHARACTERISTICS

Unless otherwise noted, these specifications apply for V_{DD}=+3.0 Vdc to +3.6 Vdc, C_L (load capacitance) on output lines = 80 pF. **Boldface limits apply for $T_A = T_J = T_{MIN}$ to T_{MAX};** all other limits $T_A = T_J$ = +25°C, unless otherwise noted.

The switching characteristics of the LM95221 fully meet or exceed the published specifications of the SMBus version 2.0. The following parameters are the timing relationships between SMBCLK and SMBDAT signals related to the LM95221. They adhere to but are not necessarily the SMBus bus specifications.

Symbol	Parameter	Conditions	Typical (1)	Limits (2)	Units (Limit)
t_{BUF}	SMBus Free Time Between Stop and Start Conditions			**1.3**	µs (min)

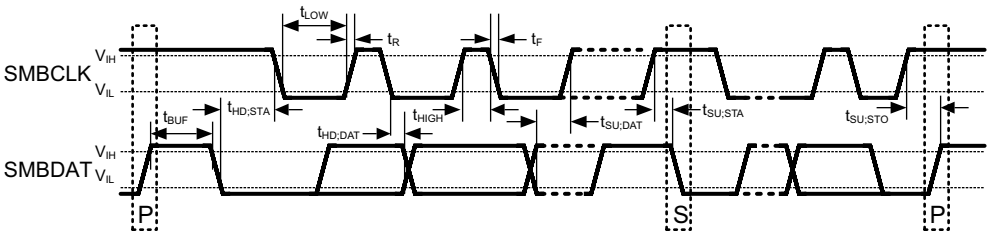

Figure 2. SMBus Communication

Pin Name	PIN #	D1	D2	D3	D4	D5	D6	D7	R1	SNP	ESD CLAMP
V_{DD}	1				x						x
D1+	2	x(1)	x		x		x	x	x		x
D1−	3	x	x		x	x	x	x	x		x
D2+	4	x	x		x		x	x	x		x
D2-	6	x	x		x	x	x	x	x		x
SMBDAT	7		x		x			x	x	x	
SMBCLK	8		x		x					x	

(1) Note: An “x” indicates that the component exists for the designated pin. SNP refers to a snap-back device.

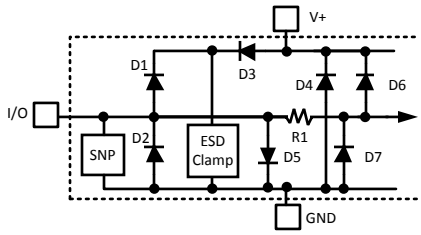

Figure 3. ESD Protection Input Structure

Copyright © 2004–2013, Texas Instruments Incorporated

Typical Performance Characteristics

Thermal Diode Capacitor or PCB Leakage Current Effect Remote Diode Temperature Reading

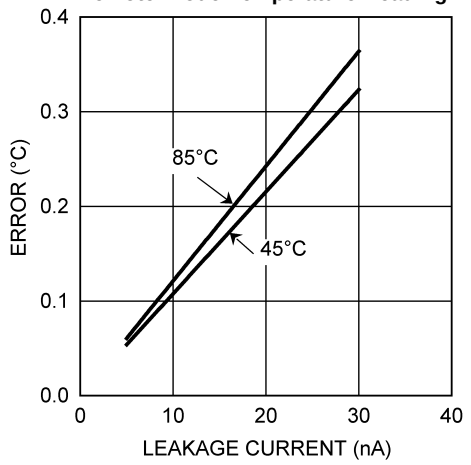

Figure 4.

Remote Temperature Reading Sensitivity to Thermal Diode Filter Capacitance

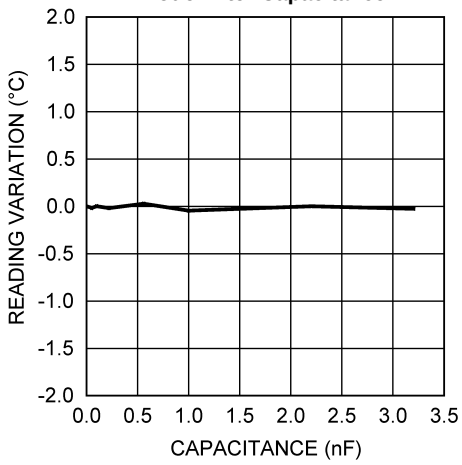

Figure 5.

Conversion Rate Effect on Average Power Supply Current

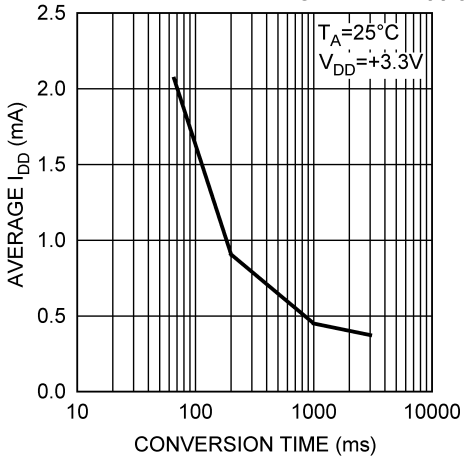

Figure 6.

FUNCTIONAL DESCRIPTION

The LM95221 is a digital sensor that can sense the temperature of 3 thermal zones using a sigma-delta analog-to-digital converter. It can measure its local die temperature and the temperature of two diode connected MMBT3904 transistors using a ΔV_{be} temperature sensing method. The 2-wire serial interface, of the LM95221, is compatible with SMBus 2.0 and I2C. Please see the SMBus 2.0 specification for a detailed description of the differences between the I2C bus and SMBus.

The temperature conversion rate is programmable to allow the user to optimize the current consumption of the LM95221 to the system requirements. The LM95221 can be placed in shutdown to minimize power consumption when temperature data is not required. While in shutdown, a 1-shot conversion mode allows system control of the conversion rate for ultimate flexibility.

The remote diode temperature resolution is eleven bits and is programmable to 11-bits unsigned or 10-bits plus sign. The least-significant-bit (LSb) weight for both resolutions is 0.125°C. The unsigned resolution allows the remote diodes to sense temperatures above 127°C. Local temperature resolution is not programmable and is always 9-bits plus sign and has a 0.25°C LSb.

The LM95221 remote diode temperature accuracy will be trimmed for the thermal diode of a Prescott processor and the accuracy will be ensured only when using this diode.

Diode fault detection circuitry in the LM95221 can detect the presence of a remote diode: whether D+ is shorted to V_{DD}, D- or ground, or whether D+ is floating.

The LM95221 register set has an 8-bit data structure and includes:

1. Most-Significant-Byte (MSB) Local Temperature Register
2. Least-Significant-Byte (LSB) Local Temperature Register
3. MSB Remote Temperature 1 Register
4. LSB Remote Temperature 1 Register
5. MSB Remote Temperature 2 Register
6. LSB Remote Temperature 2 Register
7. Status Register: busy, diode fault
8. Configuration Register: resolution control, conversion rate control, standby control
9. 1-shot Register
10. Manufacturer ID
11. Revision ID

CONVERSION SEQUENCE

The LM95221 takes approximately 66 ms to convert the Local Temperature, Remote Temperature 1 and 2, and to update all of its registers. Only during the conversion process the busy bit (D7) in the Status register (02h) is high. These conversions are addressed in a round robin sequence. The conversion rate may be modified by the Conversion Rate bits found in the Configuration Register (03h). When the conversion rate is modified a delay is inserted between conversions, the actual conversion time remains at 66ms (26 ms for each remote and 14 ms for local). Different conversion rates will cause the LM95221 to draw different amounts of supply current as shown in Figure 7.

Copyright © 2004–2013, Texas Instruments Incorporated

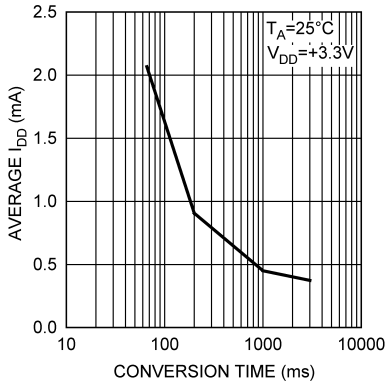

Figure 7. Conversion Rate Effect on Power Supply Current

POWER-ON-DEFAULT STATES

LM95221 always powers up to these known default states. The LM95221 remains in these states until after the first conversion.

1. Command Register set to 00h
2. Local Temperature set to 0°C
3. Remote Diode Temperature set to 0°C until the end of the first conversion
4. Status Register depends on state of thermal diode inputs
5. Configuration register set to 00h; continuous conversion, time = 66ms

SMBus INTERFACE

The LM95221 operates as a slave on the SMBus, so the SMBCLK line is an input and the SMBDAT line is bidirectional. The LM95221 never drives the SMBCLK line and it does not support clock stretching. According to SMBus specifications, the LM95221 has a 7-bit slave address. All bits A6 through A0 are internally programmed and can not be changed by software or hardware. The LM95221 has the following SMBus slave address:

Version	A6	A5	A4	A3	A2	A1	A0
LM95221	0	1	0	1	0	1	1

TEMPERATURE DATA FORMAT

Temperature data can only be read from the Local and Remote Temperature registers .

Remote temperature data is represented by an 11-bit, two's complement word or unsigned binary word with an LSb (Least Significant Bit) equal to 0.125°C. The data format is a left justified 16-bit word available in two 8-bit registers. Unused bits will always report "0".

Copyright © 2004–2013, Texas Instruments Incorporated

Table 1. 11-bit, 2's complement (10-bit plus sign)

Temperature	Digital Output	
	Binary	Hex
+125°C	0111 1101 0000 0000	7D00h
+25°C	0001 1001 0000 0000	1900h
+1°C	0000 0001 0000 0000	0100h
+0.125°C	0000 0000 0010 0000	0020h
0°C	0000 0000 0000 0000	0000h
−0.125°C	1111 1111 1110 0000	FFE0h
−1°C	1111 1111 0000 0000	FF00h
−25°C	1110 0111 0000 0000	E700h
−55°C	1100 1001 0000 0000	C900h

Table 2. 11-bit, unsigned binary

Temperature	Digital Output	
	Binary	Hex
+255.875°C	1111 1111 1110 0000	FFE0h
+255°C	1111 1111 0000 0000	FF00h
+201°C	1100 1001 0000 0000	C900h
+125°C	0111 1101 0000 0000	7D00h
+25°C	0001 1001 0000 0000	1900h
+1°C	0000 0001 0000 0000	0100h
+0.125°C	0000 0000 0010 0000	0020h
0°C	0000 0000 0000 0000	0000h

Local Temperature data is represented by a 10-bit, two's complement word with an LSb (Least Significant Bit) equal to 0.25°C. The data format is a left justified 16-bit word available in two 8-bit registers. Unused bits will always report "0". Local temperature readings greater than +127.875°C are not clamped to +127.875°C, they will roll-over to negative temperature readings.

Temperature	Digital Output	
	Binary	Hex
+125°C	0111 1101 0000 0000	7D00h
+25°C	0001 1001 0000 0000	1900h
+1°C	0000 0001 0000 0000	0100h
+0.125°C	0000 0000 0010 0000	0020h
0°C	0000 0000 0000 0000	0000h
−0.25°C	1111 1111 1100 0000	FFE0h
−1°C	1111 1111 0000 0000	FF00h
−25°C	1110 0111 0000 0000	E700h
−55°C	1100 1001 0000 0000	C900h

Copyright © 2004–2013, Texas Instruments Incorporated

SMBDAT OPEN-DRAIN OUTPUT

The SMBDAT output is an open-drain output and does not have internal pull-ups. A “high” level will not be observed on this pin until pull-up current is provided by some external source, typically a pull-up resistor. Choice of resistor value depends on many system factors but, in general, the pull-up resistor should be as large as possible without effecting the SMBus desired data rate. This will minimize any internal temperature reading errors due to internal heating of the LM95221. The maximum resistance of the pull-up to provide a 2.1V high level, based on LM95221 specification for High Level Output Current with the supply voltage at 3.0V, is 82kΩ(5%) or 88.7kΩ(1%).

DIODE FAULT DETECTION

The LM95221 is equipped with operational circuitry designed to detect fault conditions concerning the remote diodes. In the event that the D+ pin is detected as shorted to GND, D−, V_{DD} or D+ is floating, the Remote Temperature reading is –128.000 °C if signed format is selected and +255.875 if unsigned format is selected. In addition, the appropriate status register bits RD1M or RD2M (D1 or D0) are set.

COMMUNICATING with the LM95221

The data registers in the LM95221 are selected by the Command Register. At power-up the Command Register is set to “00”, the location for the Read Local Temperature Register. The Command Register latches the last location it was set to. Each data register in the LM95221 falls into one of four types of user accessibility:

1. Read only
2. Write only
3. Write/Read same address
4. Write/Read different address

A **Write** to the LM95221 will always include the address byte and the command byte. A write to any register requires one data byte.

Reading the LM95221 can take place either of two ways:

1. If the location latched in the Command Register is correct (most of the time it is expected that the Command Register will point to one of the Read Temperature Registers because that will be the data most frequently read from the LM95221), then the read can simply consist of an address byte, followed by retrieving the data byte.
2. If the Command Register needs to be set, then an address byte, command byte, repeat start, and another address byte will accomplish a read.

The data byte has the most significant bit first. At the end of a read, the LM95221 can accept either acknowledge or No Acknowledge from the Master (No Acknowledge is typically used as a signal for the slave that the Master has read its last byte). It takes the LM95221 66 ms to measure the temperature of the remote diodes and internal diode. When retrieving all 11 bits from a previous remote diode temperature measurement, the master must insure that all 11 bits are from the same temperature conversion. This may be achieved by reading the MSB register first. The LSB will be locked after the MSB is read. The LSB will be unlocked after being read. If the user reads MSBs consecutively, each time the MSB is read, the LSB associated with that temperature will be locked in and override the previous LSB value locked-in.

Copyright © 2004–2013, Texas Instruments Incorporated

SMBus Timing Diagrams

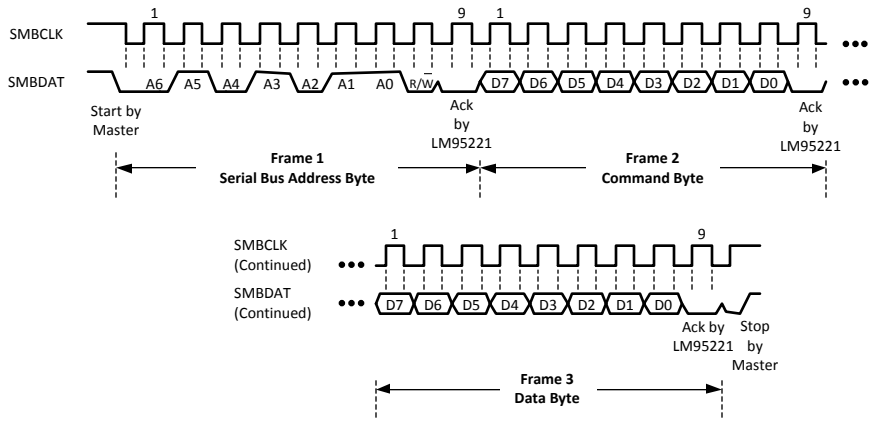

Figure 8. Serial Bus Write to the internal Command Register followed by a the Data Byte

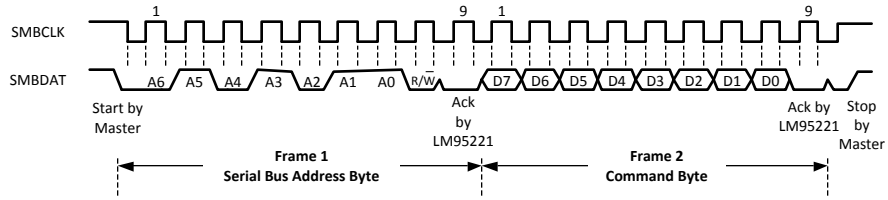

Figure 9. Serial Bus Write to the Internal Command Register

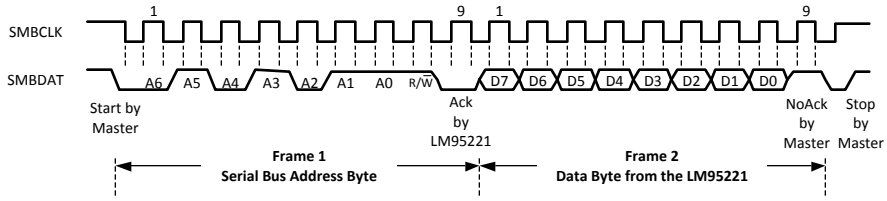

Figure 10. Serial Bus Read from a Register with the Internal Command Register preset to desired value.

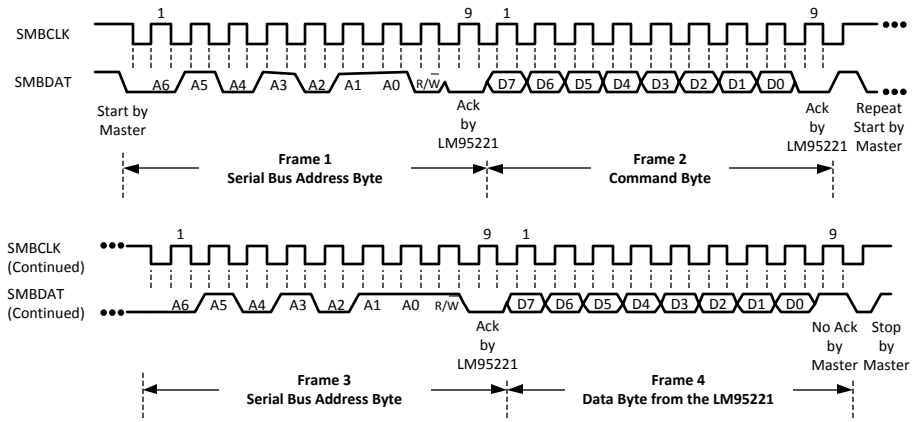

Figure 11. Serial Bus Write followed by a Repeat Start and Immediate Read

Copyright © 2004–2013, Texas Instruments Incorporated

SERIAL INTERFACE RESET

In the event that the SMBus Master is RESET while the LM95221 is transmitting on the SMBDAT line, the LM95221 must be returned to a known state in the communication protocol. This may be done in one of two ways:

1. When SMBDAT is LOW, the LM95221 SMBus state machine resets to the SMBus idle state if either SMBDAT or SMBCLK are held low for more than 35ms ($t_{TIMEOUT}$). Note that according to SMBus specification 2.0 all devices are to timeout when either the SMBCLK or SMBDAT lines are held low for 25-35ms. Therefore, to insure a timeout of all devices on the bus the SMBCLK or SMBDAT lines must be held low for at least 35ms.
2. When SMBDAT is HIGH, have the master initiate an SMBus start. The LM95221 will respond properly to an SMBus start condition at any point during the communication. After the start the LM95221 will expect an SMBus Address address byte.

ONE-SHOT CONVERSION

The One-Shot register is used to initiate a single conversion and comparison cycle when the device is in standby mode, after which the device returns to standby. This is not a data register and it is the write operation that causes the one-shot conversion. The data written to this address is irrelevant and is not stored. A zero will always be read from this register.

LM95221 Registers

Command register selects which registers will be read from or written to. Data for this register should be transmitted during the Command Byte of the SMBus write communication.

P7	P6	P5	P4	P3	P2	P1	P0
Command							

P0-P7: Command

Table 3. Register Summary

Name	Command (Hex)	Power-On Default Value (Hex)	Read/Write	# of used bits	Comments
Status Register	02h	-	RO	3	2 status bits and 1 busy bit
Configuration Register	03h	00h	R/W	4	Includes conversion rate control
1-shot	0Fh	-	WO	-	Activates one conversion for all 3 channels if the chip is in standby mode (i.e. $\overline{\text{RUN}}$/STOP bit = 1). Data transmitted by the host is ignored by the LM95221.
Local Temperature MSB	10h	-	RO	8	
Remote Temperature 1 MSB	11h	-	RO	8	
Remote Temperature 2 MSB	12h	-	RO	8	
Local Temperature LSB	20h	-	RO	2	All unused bits will report zero
Remote Temperature 1 LSB	21h	-	RO	3	All unused bits will report zero
Remote Temperature 2 LSB	22h	-	RO	3	All unused bits will report zero
Manufacturer ID	FEh	01h	RO		
Revision ID	FFh	61h	RO		

Copyright © 2004–2013, Texas Instruments Incorporated

STATUS REGISTER (Read Only Address 02h)

D7	D6	D5	D4	D3	D2	D1	D0
Busy	Reserved					RD2M	RD1M
	0	0	0	0	0		

Bits	Name	Description
7	Busy	When set to "1" the part is converting.
6-2	Reserved	Reports "0" when read.
1	Remote diode 2 missing (RD2M)	Remote Diode 2 is missing. (i.e. D2+ shorted to V_{DD}, Ground or D2-, or D2+ is floating). Temperature Reading is FFE0h which converts to 255.875 °C if unsigned format is selected or 8000h which converts to –128.000 °C if signed format is selected.
0	Remote diode 1 missing (RD1M)	Remote Diode 1 is missing. (i.e. D1+ shorted to V_{DD}, Ground or D1-, or D1+ is floating). Temperature Reading is FFE0h which converts to 255.875 °C if unsigned format is selected or 8000h which converts to –128.000 °C if signed format is selected.

CONFIGURATION REGISTER (Read Address 03h / Write Address 03h)

D7	D6	D5	D4	D3	D2	D1	D0
0	$\overline{\text{RUN}}$/STOP	CR1	CR0	0	R2DF	R1DF	0

Bits	Name	Description
7	Reserved	Reports "0" when read.
6	$\overline{\text{RUN}}$/STOP	Logic 1 disables the conversion and puts the part in standby mode. Conversion can be activated by writing to one-shot register.
5-4	Conversion Rate (CR1:CR0)	00: continuous mode 66ms, 15 Hz (typ) 01: converts every 200ms, 5 Hz (typ) 10: converts every 1 second, 1 Hz (typ) 11: converts every 3 seconds, ⅓ Hz (typ) Note: typically a remote diode conversion takes 26 ms and local conversion takes 14 ms.
3	Reserved	Reports "0" when read.
2	Remote 2 Data Format (R2DF)	Logic 0: unsigned Temperature format (0 °C to +255.875 °C) Logic 1: signed Temperature format (-128 °C to +127.875 °C)
1	Remote 1 Data Format (R1DF)	Logic 0: unsigned Temperature format (0 °C to +255.875 °C) Logic 1: signed Temperature format (-128 °C to +127.875 °C)
0	Reserved	Reports "0" when read.

Power up default is with all bits “0” (zero)

LOCAL and REMOTE MSB and LSB TEMPERATURE REGISTERS

Table 4. Local Temperature MSB (Read Only Address 10h) 9-bit plus sign format(1):

BIT	D7	D6	D5	D4	D3	D2	D1	D0
Value	SIGN	64	32	16	8	4	2	1

(1) Temperature Data: LSb = 1°C.

Table 5. Local Temperature LSB (Read Only Address 20h) 9-bit plus sign format(1):

BIT	D7	D6	D5	D4	D3	D2	D1	D0
Value	0.5	0.25	0	0	0	0	0	0

(1) Temperature Data: LSb = 0.25°C

Copyright © 2004–2013, Texas Instruments Incorporated

Table 6. Remote Temperature MSB (Read Only Address 11h, 12h) 10 bit plus sign format(1):

BIT	D7	D6	D5	D4	D3	D2	D1	D0
Value	SIGN	64	32	16	8	4	2	1

(1) Temperature Data: LSb = 1°C.

Table 7. Remote Temperature MSB (Read Only Address 11h, 12h) 11-bit unsigned format(1):

BIT	D7	D6	D5	D4	D3	D2	D1	D0
Value	128	64	32	16	8	4	2	1

(1)

Table 8. Remote Temperature LSB(Read Only Address 21, 22h) 10-bit plus sign or 11-bit unsigned binary formats(1):

BIT	D7	D6	D5	D4	D3	D2	D1	D0
Value	0.5	0.25	0.125	0	0	0	0	0

(1) Temperature Data: LSb = 0.125°C.

For data synchronization purposes, the MSB register should be read first if the user wants to read both MSB and LSB registers. The LSB will be locked after the MSB is read. The LSB will be unlocked after being read. If the user reads MSBs consecutively, each time the MSB is read, the LSB associated with that temperature will be locked in and override the previous LSB value locked-in.

MANUFACTURERS ID REGISTER

(Read Address FEh) The default value is 01h.

DIE REVISION CODE REGISTER

(Read Address FFh) Value to be determined. This register will increment by 1 every time there is a revision to the die by Texas Instruments.

Applications Hints

The LM95221 can be applied easily in the same way as other integrated-circuit temperature sensors, and its remote diode sensing capability allows it to be used in new ways as well. It can be soldered to a printed circuit board, and because the path of best thermal conductivity is between the die and the pins, its temperature will effectively be that of the printed circuit board lands and traces soldered to the LM95221's pins. This presumes that the ambient air temperature is almost the same as the surface temperature of the printed circuit board; if the air temperature is much higher or lower than the surface temperature, the actual temperature of the LM95221 die will be at an intermediate temperature between the surface and air temperatures. Again, the primary thermal conduction path is through the leads, so the circuit board temperature will contribute to the die temperature much more strongly than will the air temperature.

To measure temperature external to the LM95221's die, use a remote diode. This diode can be located on the die of a target IC, allowing measurement of the IC's temperature, independent of the LM95221's temperature. The LM95221 has been optimized to measure the remote thermal diode with a non-ideality of 1.008 and a series resistance of 2.7Ω. The thermal diode on the Pentium 4 processor on the 90 nm process has a typical non-ideality of 1.011 and a typical series resistance of 3.33Ω. Therefore, when measuring this thermal diode with the LM95221 a typical offset of +1.5°C will be observed. This offset can be compensated for easily by subracting 1.5°C from the LM95221's readings. A discrete diode can also be used to sense the temperature of external objects or ambient air. Remember that a discrete diode's temperature will be affected, and often dominated, by the temperature of its leads.

Most silicon diodes do not lend themselves well to this application. It is recommended that a 2N3904 transistor base emitter junction be used with the collector tied to the base.

When measuring a diode-connected 2N3904, with an LM95221, an offset of -3.25°C will be observed. This offset can simply be added to the LM95221's reading:

$$T_{2N3904} = T_{LM95221} + 3.25°C \quad (1)$$

DIODE NON-IDEALITY

Diode Non-Ideality Factor Effect on Accuracy

When a transistor is connected as a diode, the following relationship holds for variables V_{BE}, T and I_f:

$$I_F = I_S\left[e^{\frac{V_{be}}{\eta V_t}} - 1\right]$$

where

- $V_t = \frac{k\,T}{q}$
- $q = 1.6\times10^{-19}$ Coulombs (the electron charge),
- T = Absolute Temperature in Kelvin
- $k = 1.38\times10^{-23}$joules/K (Boltzmann's constant),
- η is the non-ideality factor of the process the diode is manufactured on,
- I_S = Saturation Current and is process dependent,
- I_f= Forward Current through the base emitter junction
- V_{BE} = Base Emitter Voltage drop (2)

In the active region, the -1 term is negligible and may be eliminated, yielding the following equation:

$$I_F = I_S\left[e^{\frac{V_{be}}{\eta V_t}}\right] \quad (3)$$

In the above equation, η and I_S are dependant upon the process that was used in the fabrication of the particular diode. By forcing two currents with a very controlled ratio (N) and measuring the resulting voltage difference, it is possible to eliminate the I_S term. Solving for the forward voltage difference yields the relationship:

$$V_{be} = \eta\frac{k\,T}{q}\ln(N) \quad (4)$$

The voltage seen by the LM95221 also includes the I_FR_S voltage drop of the series resistance. The non-ideality factor, η, is the only other parameter not accounted for and depends on the diode that is used for measurement. Since ΔV_{BE} is proportional to both η and T, the variations in η cannot be distinguished from variations in temperature. Since the non-ideality factor is not controlled by the temperature sensor, it will directly add to the inaccuracy of the sensor. For the Pentium 4 and Mobile Pentium Processor-M Intel specifies a ±0.1% variation in η from part to part. As an example, assume a temperature sensor has an accuracy specification of ±1°C at room temperature of 25 °C and the process used to manufacture the diode has a non-ideality variation of ±0.1%. The resulting accuracy of the temperature sensor at room temperature will be:

$$T_{ACC} = \pm 1°C + (\pm0.1\% \text{ of } 298\ °K) = \pm1.4\ °C \quad (5)$$

Copyright © 2004–2013, Texas Instruments Incorporated

The additional inaccuracy in the temperature measurement caused by η, can be eliminated if each temperature sensor is calibrated with the remote diode that it will be paired with.

Processor Family	η, non-ideality			Series R
	min	typ	max	
Pentium II	1	1.0065	1.0173	
Pentium III CPUID 67h	1	1.0065	1.0125	
Pentium III CPUID 68h/PGA370Socket/Celeron	1.0057	1.008	1.0125	
Pentium 4, 423 pin	0.9933	1.0045	1.0368	
Pentium 4, 478 pin	0.9933	1.0045	1.0368	
Pentium 4 on 0.13 micron process, 2-3.06GHz	1.0011	1.0021	1.0030	3.64 Ω
Pentium 4 on 90 nm process		1.011		3.33 Ω
Pentium M Processor (Centrino)	1.00151	1.00220	1.00289	3.06 Ω
MMBT3904		1.003		
AMD Athlon MP model 6	1.002	1.008	1.016	

Compensating for Diode Non-Ideality

In order to compensate for the errors introduced by non-ideality, the temperature sensor is calibrated for a particular processor. Texas Instruments temperature sensors are always calibrated to the typical non-ideality of a given processor type. The LM95221 is calibrated for a non-ideality of 1.008 and a series resistance of 2.7Ω. When a temperature sensor calibrated for a particular processor type is used with a different processor type or a given processor type has a non-ideality that strays from the typical, errors are introduced.

Temperature errors associated with non-ideality may be reduced in a specific temperature range of concern through use of an offset calibration accomplished through software.

Please send an email to hardware.monitor.team@nsc.com requesting further information on our recommended offset value for different processor types.

PCB LAYOUT FOR MINIMIZING NOISE

Figure 12. Ideal Diode Trace Layout

In a noisy environment, such as a processor mother board, layout considerations are very critical. Noise induced on traces running between the remote temperature diode sensor and the LM95221 can cause temperature conversion errors. Keep in mind that the signal level the LM95221 is trying to measure is in microvolts. The following guidelines should be followed:

1. V_{DD} should be bypassed with a 0.1µF capacitor in parallel with 100pF. The 100pF capacitor should be placed as close as possible to the power supply pin. A bulk capacitance of approximately 10µF needs to be in the near vicinity of the LM95221.
2. A 2.2nF diode bypass capacitor is required to filter high frequency noise. Place the 2.2nF capacitor as close as possible to the LM95221's D+ and D− pins. Make sure the traces to the 2.2nF capacitor are matched.
3. Ideally, the LM95221 should be placed within 10cm of the Processor diode pins with the traces being as straight, short and identical as possible. Trace resistance of 1Ω can cause as much as 1°C of error. This error can be compensated by using simple software offset compensation.
4. Diode traces should be surrounded by a GND guard ring to either side, above and below if possible. This GND guard should not be between the D+ and D− lines. In the event that noise does couple to the diode lines it would be ideal if it is coupled common mode. That is equally to the D+ and D− lines.
5. Avoid routing diode traces in close proximity to power supply switching or filtering inductors.
6. Avoid running diode traces close to or parallel to high speed digital and bus lines. Diode traces should be kept at least 2cm apart from the high speed digital traces.
7. If it is necessary to cross high speed digital traces, the diode traces and the high speed digital traces should cross at a 90 degree angle.
8. The ideal place to connect the LM95221's GND pin is as close as possible to the Processors GND associated with the sense diode.
9. Leakage current between D+ and GND and between D+ and D− should be kept to a minimum. Thirteen nano-amperes of leakage can cause as much as 0.2°C of error in the diode temperature reading. Keeping the printed circuit board as clean as possible will minimize leakage current.

Noise coupling into the digital lines greater than 400mVp-p (typical hysteresis) and undershoot less than 500mV below GND, may prevent successful SMBus communication with the LM95221. SMBus no acknowledge is the most common symptom, causing unnecessary traffic on the bus. Although the SMBus maximum frequency of communication is rather low (100kHz max), care still needs to be taken to ensure proper termination within a system with multiple parts on the bus and long printed circuit board traces. An RC lowpass filter with a 3db corner frequency of about 40MHz is included on the LM95221's SMBCLK input. Additional resistance can be added in series with the SMBDAT and SMBCLK lines to further help filter noise and ringing. Minimize noise coupling by keeping digital traces out of switching power supply areas as well as ensuring that digital lines containing high speed data communications cross at right angles to the SMBDAT and SMBCLK lines.

Copyright © 2004–2013, Texas Instruments Incorporated

REVISION HISTORY

Changes from Revision A (March 2013) to Revision B	Page
• Changed layout of National Data Sheet to TI format	18

PACKAGING INFORMATION

Orderable Device	Status (1)	Package Type	Package Drawing	Pins	Package Qty	Eco Plan (2)	Lead/Ball Finish	MSL Peak Temp (3)	Op Temp (°C)	Device Marking (4/5)	Samples
LM95221CIMM	ACTIVE	VSSOP	DGK	8		TBD	Call TI	Call TI	0 to 85	T21C	Samples
LM95221CIMM/NOPB	ACTIVE	VSSOP	DGK	8	1000	Green (RoHS & no Sb/Br)	CU SN	Level-1-260C-UNLIM	0 to 85	T21C	Samples
LM95221CIMMX	ACTIVE	VSSOP	DGK	8		TBD	Call TI	Call TI	0 to 85	T21C	Samples
LM95221CIMMX/NOPB	ACTIVE	VSSOP	DGK	8	3500	Green (RoHS & no Sb/Br)	CU SN	Level-1-260C-UNLIM	0 to 85	T21C	Samples

(1) The marketing status values are defined as follows:
ACTIVE: Product device recommended for new designs.
LIFEBUY: TI has announced that the device will be discontinued, and a lifetime-buy period is in effect.
NRND: Not recommended for new designs. Device is in production to support existing customers, but TI does not recommend using this part in a new design.
PREVIEW: Device has been announced but is not in production. Samples may or may not be available.
OBSOLETE: TI has discontinued the production of the device.

(2) Eco Plan - The planned eco-friendly classification: Pb-Free (RoHS), Pb-Free (RoHS Exempt), or Green (RoHS & no Sb/Br) - please check http://www.ti.com/productcontent for the latest availability information and additional product content details.
TBD: The Pb-Free/Green conversion plan has not been defined.
Pb-Free (RoHS): TI's terms "Lead-Free" or "Pb-Free" mean semiconductor products that are compatible with the current RoHS requirements for all 6 substances, including the requirement that lead not exceed 0.1% by weight in homogeneous materials. Where designed to be soldered at high temperatures, TI Pb-Free products are suitable for use in specified lead-free processes.
Pb-Free (RoHS Exempt): This component has a RoHS exemption for either 1) lead-based flip-chip solder bumps used between the die and package, or 2) lead-based die adhesive used between the die and leadframe. The component is otherwise considered Pb-Free (RoHS compatible) as defined above.
Green (RoHS & no Sb/Br): TI defines "Green" to mean Pb-Free (RoHS compatible), and free of Bromine (Br) and Antimony (Sb) based flame retardants (Br or Sb do not exceed 0.1% by weight in homogeneous material)

(3) MSL, Peak Temp. -- The Moisture Sensitivity Level rating according to the JEDEC industry standard classifications, and peak solder temperature.

(4) There may be additional marking, which relates to the logo, the lot trace code information, or the environmental category on the device.

(5) Multiple Device Markings will be inside parentheses. Only one Device Marking contained in parentheses and separated by a "~" will appear on a device. If a line is indented then it is a continuation of the previous line and the two combined represent the entire Device Marking for that device.

Important Information and Disclaimer: The information provided on this page represents TI's knowledge and belief as of the date that it is provided. TI bases its knowledge and belief on information provided by third parties, and makes no representation or warranty as to the accuracy of such information. Efforts are underway to better integrate information from third parties. TI has taken and continues to take reasonable steps to provide representative and accurate information but may not have conducted destructive testing or chemical analysis on incoming materials and chemicals. TI and TI suppliers consider certain information to be proprietary, and thus CAS numbers and other limited information may not be available for release.

In no event shall TI's liability arising out of such information exceed the total purchase price of the TI part(s) at issue in this document sold by TI to Customer on an annual basis.

TAPE AND REEL INFORMATION

REEL DIMENSIONS

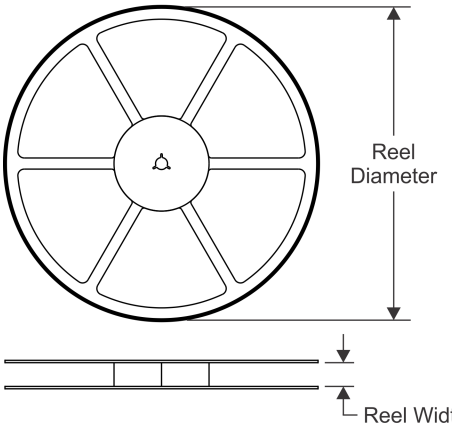

TAPE DIMENSIONS

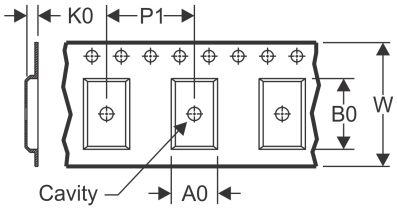

A0	Dimension designed to accommodate the component width
B0	Dimension designed to accommodate the component length
K0	Dimension designed to accommodate the component thickness
W	Overall width of the carrier tape
P1	Pitch between successive cavity centers

QUADRANT ASSIGNMENTS FOR PIN 1 ORIENTATION IN TAPE

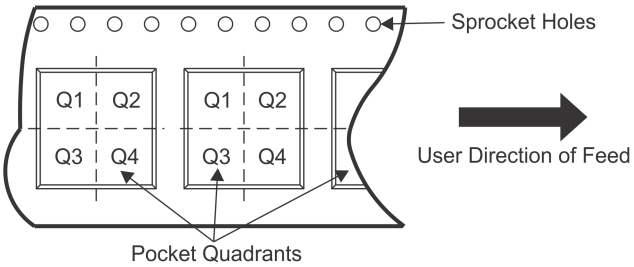

*All dimensions are nominal

Device	Package Type	Package Drawing	Pins	SPQ	Reel Diameter (mm)	Reel Width W1 (mm)	A0 (mm)	B0 (mm)	K0 (mm)	P1 (mm)	W (mm)	Pin1 Quadrant
LM95221CIMM/NOPB	VSSOP	DGK	8	1000	178.0	12.4	5.3	3.4	1.4	8.0	12.0	Q1
LM95221CIMMX/NOPB	VSSOP	DGK	8	3500	330.0	12.4	5.3	3.4	1.4	8.0	12.0	Q1

TAPE AND REEL BOX DIMENSIONS

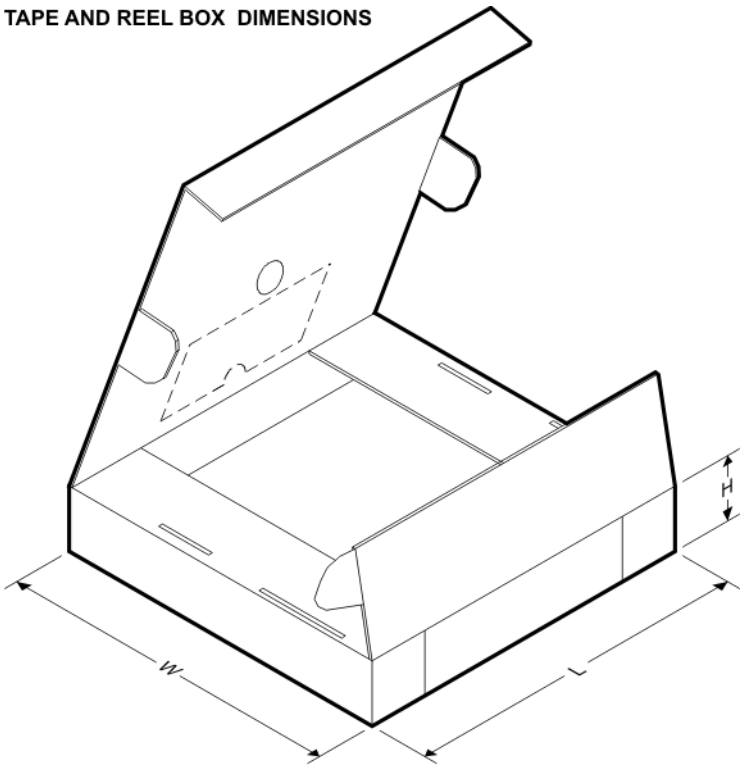

*All dimensions are nominal

Device	Package Type	Package Drawing	Pins	SPQ	Length (mm)	Width (mm)	Height (mm)
LM95221CIMM/NOPB	VSSOP	DGK	8	1000	210.0	185.0	35.0
LM95221CIMMX/NOPB	VSSOP	DGK	8	3500	367.0	367.0	35.0

DGK (S–PDSO–G8) PLASTIC SMALL–OUTLINE PACKAGE

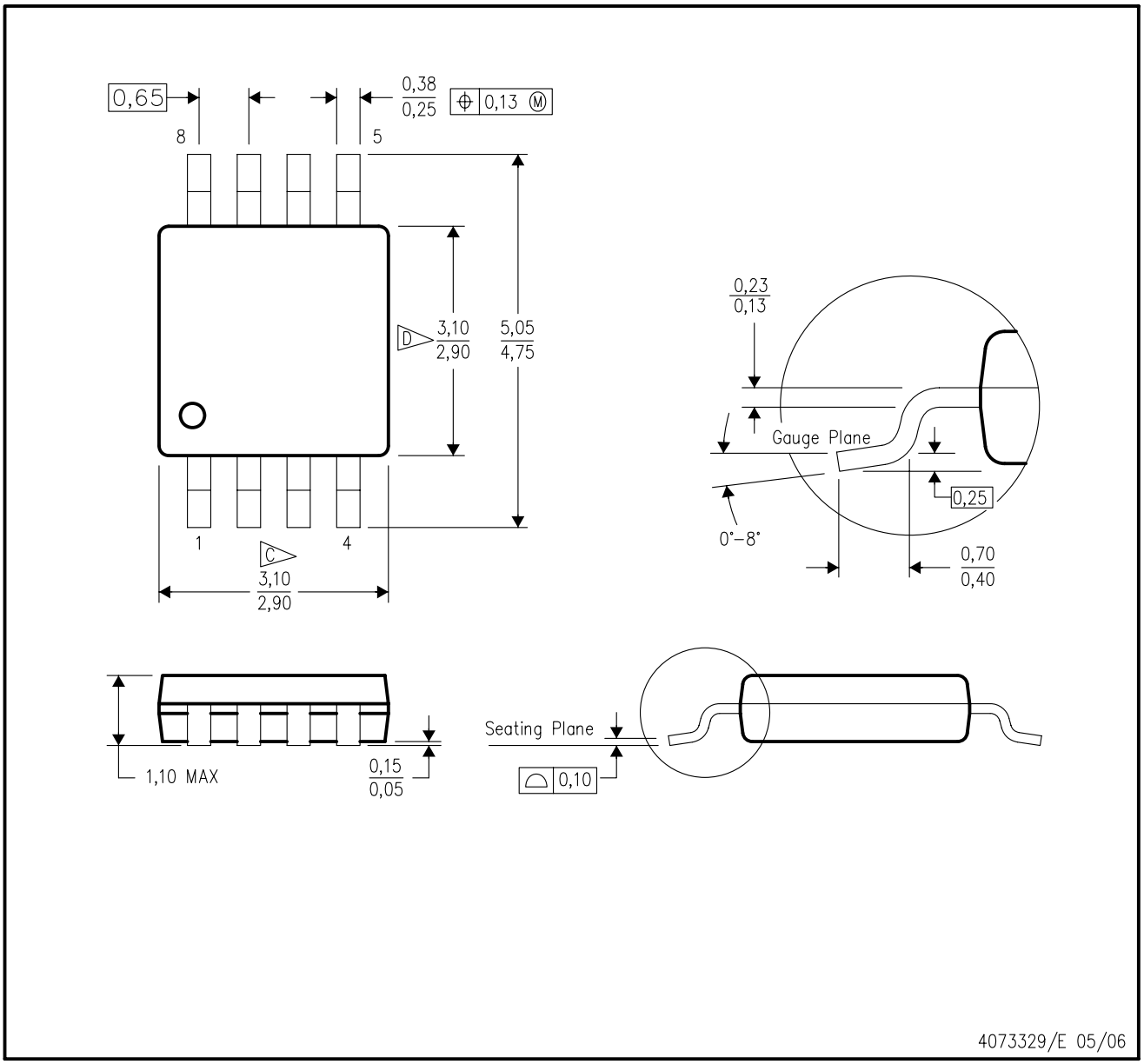

NOTES:
A. All linear dimensions are in millimeters.
B. This drawing is subject to change without notice.
C. Body length does not include mold flash, protrusions, or gate burrs. Mold flash, protrusions, or gate burrs shall not exceed 0.15 per end.
D. Body width does not include interlead flash. Interlead flash shall not exceed 0.50 per side.
E. Falls within JEDEC MO–187 variation AA, except interlead flash.

IMPORTANT NOTICE

Texas Instruments Incorporated and its subsidiaries (TI) reserve the right to make corrections, enhancements, improvements and other changes to its semiconductor products and services per JESD46, latest issue, and to discontinue any product or service per JESD48, latest issue. Buyers should obtain the latest relevant information before placing orders and should verify that such information is current and complete. All semiconductor products (also referred to herein as “components”) are sold subject to TI’s terms and conditions of sale supplied at the time of order acknowledgment.

TI warrants performance of its components to the specifications applicable at the time of sale, in accordance with the warranty in TI’s terms and conditions of sale of semiconductor products. Testing and other quality control techniques are used to the extent TI deems necessary to support this warranty. Except where mandated by applicable law, testing of all parameters of each component is not necessarily performed.

TI assumes no liability for applications assistance or the design of Buyers’ products. Buyers are responsible for their products and applications using TI components. To minimize the risks associated with Buyers’ products and applications, Buyers should provide adequate design and operating safeguards.

TI does not warrant or represent that any license, either express or implied, is granted under any patent right, copyright, mask work right, or other intellectual property right relating to any combination, machine, or process in which TI components or services are used. Information published by TI regarding third-party products or services does not constitute a license to use such products or services or a warranty or endorsement thereof. Use of such information may require a license from a third party under the patents or other intellectual property of the third party, or a license from TI under the patents or other intellectual property of TI.

Reproduction of significant portions of TI information in TI data books or data sheets is permissible only if reproduction is without alteration and is accompanied by all associated warranties, conditions, limitations, and notices. TI is not responsible or liable for such altered documentation. Information of third parties may be subject to additional restrictions.

Resale of TI components or services with statements different from or beyond the parameters stated by TI for that component or service voids all express and any implied warranties for the associated TI component or service and is an unfair and deceptive business practice. TI is not responsible or liable for any such statements.

Buyer acknowledges and agrees that it is solely responsible for compliance with all legal, regulatory and safety-related requirements concerning its products, and any use of TI components in its applications, notwithstanding any applications-related information or support that may be provided by TI. Buyer represents and agrees that it has all the necessary expertise to create and implement safeguards which anticipate dangerous consequences of failures, monitor failures and their consequences, lessen the likelihood of failures that might cause harm and take appropriate remedial actions. Buyer will fully indemnify TI and its representatives against any damages arising out of the use of any TI components in safety-critical applications.

In some cases, TI components may be promoted specifically to facilitate safety-related applications. With such components, TI’s goal is to help enable customers to design and create their own end-product solutions that meet applicable functional safety standards and requirements. Nonetheless, such components are subject to these terms.

No TI components are authorized for use in FDA Class III (or similar life-critical medical equipment) unless authorized officers of the parties have executed a special agreement specifically governing such use.

Only those TI components which TI has specifically designated as military grade or “enhanced plastic” are designed and intended for use in military/aerospace applications or environments. Buyer acknowledges and agrees that any military or aerospace use of TI components which have ***not*** been so designated is solely at the Buyer's risk, and that Buyer is solely responsible for compliance with all legal and regulatory requirements in connection with such use.

TI has specifically designated certain components as meeting ISO/TS16949 requirements, mainly for automotive use. In any case of use of non-designated products, TI will not be responsible for any failure to meet ISO/TS16949.

Products		**Applications**	
Audio	www.ti.com/audio	Automotive and Transportation	www.ti.com/automotive
Amplifiers	amplifier.ti.com	Communications and Telecom	www.ti.com/communications
Data Converters	dataconverter.ti.com	Computers and Peripherals	www.ti.com/computers
DLP® Products	www.dlp.com	Consumer Electronics	www.ti.com/consumer-apps
DSP	dsp.ti.com	Energy and Lighting	www.ti.com/energy
Clocks and Timers	www.ti.com/clocks	Industrial	www.ti.com/industrial
Interface	interface.ti.com	Medical	www.ti.com/medical
Logic	logic.ti.com	Security	www.ti.com/security
Power Mgmt	power.ti.com	Space, Avionics and Defense	www.ti.com/space-avionics-defense
Microcontrollers	microcontroller.ti.com	Video and Imaging	www.ti.com/video
RFID	www.ti-rfid.com		
OMAP Applications Processors	www.ti.com/omap	**TI E2E Community**	e2e.ti.com
Wireless Connectivity	www.ti.com/wirelessconnectivity		

Mailing Address: Texas Instruments, Post Office Box 655303, Dallas, Texas 75265
Copyright © 2013, Texas Instruments Incorporated